PROPWASH

Canadian Military Flight Engineers Association Newsletter

April 2013

Editors' note

Whenever I take a flight on a commercial aircraft, it reminds me of days, long past, when I flew on multi engine aircraft as a member of a three man crew. It seems like ages ago, that I manned a Flight Engineers panel. The position no longer exists in todays, two man cockpits. The absence of the flight Engineer, makes me to ponder the flight safety ramifications of operating todays large aircraft, with only a two man crew. After lengthy research of the pros and cons of two man versus three man cockpits, I discovered arguments and opinions that were mainly in agreement with the two man crew concept.

One of the most widely stated opinions, was that with modern cockpits, a third crew member on duty (not just as relief) does not improve safety anywhere near enough to justify the cost.

And so, the cost of the third crew member has been one of the main driving forces to eliminate the Flight Engineer.

Ever since the decision to permit the size of crews to be reduced to two, the National Transportation Safety Board (NTSB) in all the accident investigations it has conducted, has never mentioned the positive impact, that a third crew member could have had on the outcome or prevention of the accidents. One fatal accident that comes to mind, is the Swissair crash into the ocean, at Peggy's Cove, near Halifax, in 1998. Two hundred and twenty nine souls were lost in this mishap. Could the presence of a Flight Engineer onboard this ill fated aircraft, have assisted in changing the final outcome of this incident?

Read more on this controversial topic in the following pages . . . . .

The Three-Holer

TO ANYONE BORN After1990

The Boeing 727 is that odd-looking airliner in the far corner of the airport, the one with three jet engines clustered around the tail, one mounted atop the fuselage. What made the once-ubiquitous 727 such a rarity on today's airport ramps, was the noise from its engines. But at one time it was the world's fastest-selling airliner. This year we celebrate 50 years since its first flight--on February 9, 1963—and first customer delivery (to United Air Lines, in October).

The 727 is the only airplane Boeing has ever built with three engines and a T tail, but that's not what surprised people most when they first saw it. During its early appearances, as the 727 approached the runway, bystanders gaped at the expanse of sheet metal that extended from its wings. Like a raptor approaching its nest, the Seven Two completely changed the shape of its wings, with triple-slot flaps emerging from the trailing edge and leading edge devices protruding in front, to create a low-speed airfoil of high camber, or curvature. Once in cruise though, that flap array disappeared—folded or retracted like the blades of a pocket knife—and the wing became a scimitar enabling speeds of 600-plus mph.

The Seven Two's pilots still swear by it. Rob Buck flew all three seats during 18 years at Delta, and he still remembers the **"WAGS"—**wild-ass guesses, or estimates in which you take the airplane's gross weight (150,000 pounds), drop the one and the three zeroes, divide the remaining 50 by 2, then add 2 to the 25, put a one in front of it, and that was one of your key rotation V speeds: about 127 knots (146 mph). It's one reason he calls it "the greatest Cessna 172 ever made," except that it "would go like hell."

PIPISTREL TAURUS G4 ELECTRIC FLIGHT FOR FOUR

This year, the Slovenian company, Pipistrel put the world's first four-seat electric plane in the air. Built for competition in the 2011 NASA/Goog[e Green Flight Challenge, the aircraft is composed of two smaller Pipistrel Taurus G2 gliders connected by a horizontal spar. With a 450-pound lithium-ion battery pack, a six-foot twin-blade propeller and a 75-foot wingspan, the G4 can take off under its own power and cruise 200 miles on a single charge.

We have clearance, Clarence. Roger, Roger. What's our vector, Victor?

Criteria For the Evolution of the Two-Man Cockpit

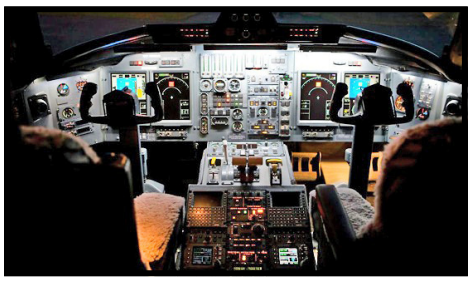

Older air transport category turbojet aircraft, typically classified as second generation turbojet civil aircraft within the aircraft industry (such as the DC-8, the Boeing 707, and Boeing 727), often employ three air crew members; a pilot or captain, a copilot or first officer, and a flight engineer who is also a pilot. The third crew member position of flight engineer on complex multiengined aircraft dating back to the 1940's, involved a third pilot of an air crew in monitoring engine conditions, fuel state, and various other aircraft systems, which require constant adjustment during operation of the aircraft. Some second generation aircraft, notably the Boeing 727, were developed, certified and manufactured on the cusp between second generation turbojet aircraft, and the third generation jet-age aircraft (such as the Boeing 737, the MD-88, and the Airbus A-320). As such, the 727 incorporated the advancements in engine and control systems technology, which no longer required the intense and constant monitoring adjustments of older aircraft provided by the third crew member flight engineer, but were nonetheless certified with a flight engineer to provide such monitoring. The Boeing 727 was not the only aircraft to retain the third crew member flight engineer's position, and other three-pilot aircraft include: of civil aircraft, the DC -8, the B-707, the DC-10, the L- 1011 and the Airbus A-300; and on the military side, the C-130, the C-141, the C-5, and the KC-10. It has long been recognized in the aviation industry that conversion of a three pilot or three crew member aircraft to a two pilot or two crew member aircraft, would be extremely effective in reducing the operating costs for the aircraft involved in the conversion. The elimination of the third pilot, or crew member flight engineer's position, has been determined to provide the following economic benefits:

1) The savings resulting from the elimination of the salary and employment-related benefits of the third crew member, eliminated from each air crew assigned to each airframe. Freight aircraft operators typically maintain a ratio of three air crews to each air frame, with each air crew consisting of three pilots or crew members. Passenger aircraft operators typically maintain a ratio of air crews, which is closer to six air crews per airframe, with each air crew consisting of three pilots or crew members. Thus, the elimination of the third pilot or the flight engineer's position from each air crew of freight aircraft or passenger aircraft, operators reduces the overall required air crew staffing of the operators from 3-6 pilots per airframe, per year.

2) For many passenger aircraft operators and for some air freight operators, in order to make schedules throughout their air routes around the world, crews will be flown by company aircraft or other carriers to various destinations to staff flights. The practice of providing these crews at these various destinations, incurs an expense for the transportation of these air crews and their lodging at hotels and other associated miscellaneous expenses. The elimination of the third crew member pilot or flight engineer's position, eliminating every third crew member from an air crew, reduces these expenses by 33%.

3) Providing the third crew member pilot or the flight engineer, in each air crew also incurs training expenses unique to the flight engineer's position, both initial training of the duties involved in the flight engineer's position, and recurrent training, to keep the flight engineer's skills sharp. Elimination of the third crew member pilot or the flight engineer position, eliminates these training expenses as well as the expenses associated with flight engineer instructors, and the associated training aids and documentation.

In 1992, it was estimated that the elimination of the third pilot crew member or the flight engineer position, would save approximately $250,000 per aircraft per year for a freight aircraft fleet operator, to $400,000 per aircraft per year for a passenger aircraft fleet operator

---

The word gremlin' is now part of the English (American) language.

Gremlins have become part of a rich American folklore. They are malicious little ill-humored gnome-like creatures with supernatural powers, able to walk around on B-17 wings in flight or work their way into a carburetor through the gas line. First heard of during the Second World War, they were responsible for unexplained and/or unexplainable mechanical failures mostly in aircraft and mostly in B-29 engines, even in-flight. There are many scholarly opinions about where the word and the legend came from, such as: "They were, perhaps, a blend of Irish gruaimín, a bad-tempered little fellow (from Middle Irish gruaim, gloom, surliness) and goblin." In fact, they sprang fully grown from the fertile minds of American fighting men trying to make some sense of a world gone mad. Semi tongue-in-cheek articles were written about them in many war time publications. They were, at times, taken seriously, at others, with the usual wry laughter that accompanied GIs in battle. The word is now used to describe most any inexplicable mechanical failure. They, "Gremlins," can always be blamed when all else fails.

Man in a hot air balloon is lost over Ireland. He looks down and sees a farmer in the fields and shouts to him, Where am I? The Irish farmer looks back up and shouts back,
'You're in that basket.'

The 1998 Swissair MD-11 accident was tragic.

Although the cause of the accident has yet to be determined, an article in the September, 14, issue of Aviation Week and Space Technology titled, "Fire Damage Sought in Cockpit Debris" describes a likely scenario. We may have to wait years for the investigative authorities reports, however, the scenario as outlined in the aforementioned issue of Aviation Week and Space Technology, stands as a good example of how safety on large modern aircraft, has been impaired by the removal of the ***flight engineer.***

A Brief Review:

Standard procedure for the MD-11 dictates that once smoke has been detected in the cabin, the captain and first officer don oxygen masks, establish communication, and then attempt to isolate the source of smoke contamination. On the overhead panel of the MD-11 is a four position, rotary switch, that was designed to expedite the process of establishing and isolating the source of smoke contamination. The first selection of the "Smoke Elect/Air" switch is labeled "3/1 OFF". This position isolates #3 generator and #1 engine bleed source. Among the items that receive power from #3 generator are the #2 and #3 VHF radios, #2 transponder, DFDR, and in some aircraft, the CVR. The checklist calls for the pilots to select another radio and transponder *before* turning the "Smoke Elect/Air" switch to the "3/1 OFF" position. If for some reason the pilots neglect to carry out this checklist instruction, then radio communication would be lost, there would be no operable transponder and the DFDR would cease recording. Curiously, 6 minutes before Swissair Flight 111 crashed into the sea, VHF communication with Halifax ATC ceased, the transponder went dead, and the DFDR stopped recording. It is quite ***possible that the captain and first officer on Swissair Flight 111 failed to select an alternate source for VHF communication and transponder, before selecting the "Smoke Elect/Air" switch to "3/1 OFF."***

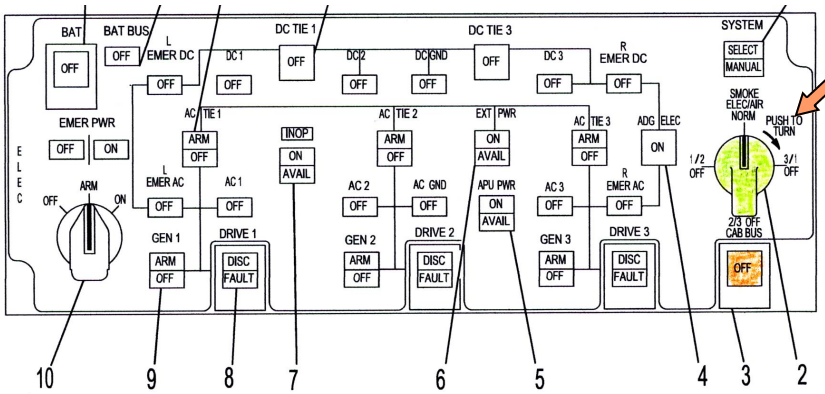

FORWARD OVERHEAD PANEL

Very few of us have had to face the same conditions as the captain and first officer of Swissair Flight 111. However, many of us have experienced similar conditions in the flight simulator. Remember if you can, how cumbersome and uncomfortable you felt with the smoke goggles and oxygen mask on your face. Remember how difficult it was, to get the smoke goggles over your eye glasses; how difficult it was, to purge the smoke from the goggles, and how difficult it was, to communicate with other crew members and ATC. How many seconds did these endeavors take? Were you able to even think about the possible source of the smoke entering the cockpit while you were arranging your emergency face ware? Did you feel a little disoriented? How was your system knowledge recall under duress? Now factor in that during your experience, the smoke was only simulated, and subconsciously you understood that in an hour or so, you would be sitting in the debriefing room drinking a cup of coffee.

Flight Engineer Input:

For the purposes of presenting my argument as to how safety has been degraded by the removal of the flight engineer from large modern aircraft, and for this purpose only, I am going to assume that the above scenario actually occurred. If there had been a flight engineer aboard Swissair Flight 111, how could he have assisted? Would the crew have stood a better chance of survival?

A professional flight engineer (pfe), is a person who began his or her career as an aircraft maintenance engineer, and is therefore enamored with the machine rather than the process of piloting. With years of practical experience of aircraft system operation, component location and various toxic fluids used in modern aircraft, the pfe has a more expansive "feel" for the source of aircraft malfunctions. It is possible that with this experience, a pfe could have had a more intuitive opinion as to the source of smoke contamination on Swissair Flight 111, and expedited the identification and isolation of the source. However, even if the flight engineer had been a third pilot, there would have been one extra opinion as to the smoke source.

In a three man crew configuration, when a malfunction occurs, the captain will usually delegate the first officer to fly the airplane, and communicate with ATC, while the captain and flight engineer complete the checklist. This method ensures that one person is focused on flying, complying with ATC instructions, and maintaining the airplane within safety parameters. The two persons completing the checklist ensures confirmation of switches operated, verification of all checklist items, in a less stressful cockpit environment. If a flight engineer had been part of the Swissair Flight 111 flight crew, then the checklist item requiring pre-selection of alternate VHF radio and transponder sources, before operating the "Smoke Elect/Air" switch to "3/1 OFF" position may not have been overlooked.

Cockpit Resource Management training within a three man crew concept, encourages the captain to utilize all resources available to him in emergency situations. Given the Swissair Flight 111 captains decision to jettison fuel, that procedure could have been delegated to the flight engineer. Communication with the cabin crew members, could have also been delegated to the flight engineer. In a three man crew configuration, the ability to further share the load under duress, reduces stress on the captain and allows him precious room in which to make decisions, and calculate his flight profile. In fact, if there *had* been three crew members instead of just two on board Swissair Flight 111, then the questionable decision to jettison fuel first before landing would more likely have been challenged and discussed.

Too Late for Change?

I have utmost respect for the pilots who operate two man crew large aircraft. However, these aircraft are extremely complex and it is un-

reasonable to expect a pilot to have an intricate knowledge required, for piloting his or her airplane, as well as extensive mechanical knowledge. The MD-11 and B-747-400 aircraft were not simplified, when the decision was made to relegate flight engineer duties to computers; aircraft systems remained largely unchanged from their predecessors. When everything is working well, there are usually no problems. However, when emergency situations arise, there is little doubt that system knowledge, a third set of eyes, and another crew member to share in delegation of duties are a real asset. Since air traffic is rapidly reaching critical levels at major airports, emergency situations on board aircraft will become increasingly tenuous.

I predict that this is not the last accident that will reinforce the poor decision that was made to remove the flight engineer from modern large aircraft. Realistically, however, having made the decision to remove the flight engineer, there is little chance of a reversal. Therefore, what is now a very serious safety problem aboard two man crew large aircraft, will be accentuated in the future with the advent of even larger and more complex aircraft such as the A-380, Airbus..

Also exacerbating the degradation of safety, is the desire of aircraft manufacturers and airlines to extend the two-engine aircraft ETOPS approval to more than 180 minutes. In the future, if two engine, two man crew aircraft are permitted to fly on routes, such as Los Angeles to Tokyo, then it is only a matter of time before there is a ditching at sea. Mathematically, there is more likelihood of a two engine failure occurring, than a three or four engine failure. In a two man crew configuration, there is also a higher probability on a two engine aircraft, of shutting down the wrong engine when an engine failure occurs.

There are many pilots who agree on these issues but are reticent to voice an unpopular opinion. Studies have been completed that show advanced aircraft have not significantly reduced the aircraft accident rate. To my knowledge, none of these studies has attempted to define the effect of removing the flight engineer from the cockpit of advanced aircraft.

OR

A CRT systems warning panel can reduce crew workload in the event of a failure, by presenting the details on a screen, with the corrective actions which would normally have been read out from a check-list. This would be seen by the airlines as a plausible reason why CRT technology could enable crew reduction. But problems occur in the event of multiple failures, where the screen cannot contain all the necessary information. The computer, according to program, selects what it determines is the "priority" item to display. On an engineer's panel, all the information is there, and the crew can decide priorities, or even deal with several problems at once. With screen presentation, panel space for the hardware is the problem. But the main headache is the complexity of the programming involved. View Murphy's law—"if a system is designed in such a way that it can be operated wrongly, sooner or later it will be"—is much more likely to be invoked on a small multiple pushbutton panel, than on a larger engineer's side panel, where switches and buttons are more sparsely laid out, and can be of different shape. Multi-button panels require more concentration to operate correctly. Is it logical then, to take away the man who is best able to concentrate on them?

The cost of a flight engineer

Although we talk of the "three-man" crew, specific reference to the third man always identifies the flight engineer. The rationale is, that the gross cost of employing a flight engineer is less than one per cent of aircraft direct operating costs. The net cost, considering the contribution he can make to safer, more precise systems handling, cannot be calculated, but may be near zero. Thus, the airlines are "prepared to sacrifice a certain level of safety for a doubtful saving in cost."

There are some who reject the three-crew argument on the basis that "two's company, three's a crowd," meaning that the inter-crewmember communication problem is increased by 50 per cent. Also the "level of arousal" of crew members is a critical factor in their efficiency. If the level is too high, they are not at their optimum performance, but if it is too low, as is more likely in a three crew cockpit at certain phases of flight, then slackness is induced, an attitude which could continue into a more critical phase such as final approach. The attitude is, that in a properly disciplined crew, slackness should never occur, and at high arousal phases, the three-man crew has the advantage.

Boeing and Sikorsky Pick X2 for JMR Demo

The coaxial-rotor, pusher-propeller X2 configuration was picked to meet the Army Aviation Applied Technology Directorate's (AATD) requirement for a cruise speed of up to 230kt - at least 50% faster than a conventional helicopter. Sikorsky's company-funded X2 Technology demonstrator exceeded 260kt is September 2010, and two industry-funded S-97, Raider, light tactical helicopter prototypes now being built, are designed to cruise at 235kt clean and 220kt with weapons. The first Raider will fly in 2014.

Boeing and Sikorsky say the X2 configuration was also chosen for its coaxial-rotor hover efficiency.

Boeing 787 Lemon?

The Dreamliner is a massive jet from Boeing, the company's most fuel-efficient airliner and the first major airplane to be made with composite materials--specifically, carbon fiber reinforced plastic. It's made of 80% composite by volume, which makes it much lighter than typical planes without sacrificing strength, and has a lot of nice consumer-facing features--bigger windows, new noise reduction techniques, modular bathrooms, and more space for passengers. It'll hold up to 296 passengers too, this is a big boy. It's not a revolutionary plane, but we all care about it because it's the next evolution of the planes we'll all take. You probably won't fly on an all-electric plane any time soon, but you probably will fly on a Dreamliner.

The Dreamliner: has been plagued with more serious problems than any other major new jet line in recent memory. Its batteries have a tendency to catch on fire. Earlier this year, both Japan Airlines and the FAA grounded all Dreamliners under their control until we can get a handle on why these things keep breaking.

What's wrong with them**?** The Dreamliner relies on electrical power much more than its predecessor, the 777. Earlier planes used *bleed air*, which is super-hot, super-pressurized air taken from within the engine, and used it for all kinds of functions, from de-icing to pressurizing the cabin itself. But in order to cut down on energy use, the 787 relies instead on electrical power for that, from some very powerful lithium ion batteries. Those batteries have of late taken up a new hobby: catching on fire and freaking the hell out of all of us.

There are different kinds of lithium ion batteries, using different chemicals and different reactions, and they behave pretty differently. The Dreamliner uses cobalt oxide batteries, the same kind as what's used in smartphones, laptops, and tablets. It's chosen for all of those purposes because it's got a crazy-high energy content for its size and weight, like twice that of the batteries used in electric cars, but it also has one very big problem. That would be heat.

Gadget makers have worked for years on cooling methods so their batteries don't catch on fire, and sometimes they do anyway, but these batteries are pretty small and not all that hazardous. The batteries in a Dreamliner, on the other hand, are *huge*. And on fire.

But the problems the Dreamliner is having aren't exactly the same kinds of problems as, say, the Boeing 777. The 777 has had eight so-called "aviation occurrences," which is airplane code for "accidents." But those problems were mostly easy to solve, there were a few issues with the de-icing system, which was subsequently redesigned, and all the other issues were one-offs, like a 2011 cockpit fire that was probably due to "a possible electrical fault with a supply hose in the cockpit crew oxygen system."

The Dreamliner has had many more problems. Cockpit windows have cracked several times. At least three of the 50 active Dreamliners have had overheating problems with the lithium ion batteries, leading to smoke and/or fire. Two planes have had fuel leak problems. These are much more difficult to manage than a de-icing flaw; you can't just swap out the batteries, since there are no other batteries with the same size and energy storage, and as the batteries are a much more integral part of the plane's entire operation, this isn't a small issue. The fact that the Dreamliners have had similar problems is a cause for concern.

The Dreamliner has had a very long and tumultuous birthing process, with several redesigns over the years. The Dreamliner is actually several years behind schedule on many of its deliveries, you'd think in that time someone would make sure the thing didn't catch on fire. But nobody really knows how this kind of thing got by. Best guess is that with such a new kind of electrical power system, nobody really knew how the Dreamliner would respond with repeated use. On the other hand, Qatar Airlines CEO, Akbar Al Baker, among other "airline insiders," has said he's not surprised by the groundings.

The FAA and the equivalents in other countries will conduct full-scale investigations into the problems with the Dreamliners. It will not be known what the solutions are until the findings are seen. So, "can the battery situation be fixed and how," is the answer, "it can probably be fixed, but until we know precisely what the problem is we won't know how." In the meantime, some of the airlines are demanding payment, considering they just spent millions of dollars on a plane they can't fly, and it's possible that others will decide not to continue with their purchases. Boeing has about 800 Dreamliners set to be built. If people start pulling out, the company is going to be in serious trouble

The guy who wrote the following is retired from Boeing. Thought you might find it interesting..... sorta "insider stuff"

For one thing, the problem may not be with the batteries themselves, but with the control system that keeps the charge on them at a given level. And the "battery problem" is just one problem in many. Last week I had my regular monthly lunch with 5 fellow Boeing engineers, (all but one retired) and we talked at length about what we call, the "nightmare liner". We all agreed we will not book a flight on one. The one engineer still working (at age 74!!) says the news from inside is not good, and that there are no quick fixes for the multitude of problems that the 787 has.

The disaster began with the merger with McDonnell-Douglas in the mid-90s. The McD people completely took over the Board and installed their own people. They had no experience with commercial airplanes, having done only "cost-plus" military contracting, and there are worlds of difference between military and commercial airplane design. Alan Mulally, a life-long Boeing guy, was against outsourcing as President of Boeing Commercial Division, but instead of making him CEO after he almost single-handedly saved the company in the early 90s, the Board brought in Harry Stonecipher from McDonnell-Douglas, who was big on outsourcing. Stonecipher was later fired for ethics violations, and then the Board brought in Jim McNerney, a glorified scotch tape salesman from 3M and big proponent of outsourcing, to develop the 787. (Alan Mulally left to become CEO of Ford and completely rejuvenated that company.) McNerney and his bean-counting MBAs thought that instead of developing the 787 "in-house" for about $11 billion, they could outsource the design and building of the airplane for about $6 billion. Right, now they are at $23 billion and counting, three years behind in deliveries, with a grounded fleet. That's typical for military contracting, so McNerney and the Board probably think they are doing just fine. But it

will destroy Boeing's commercial business in the same way McDonnell wrecked Douglas when they took over that company decades ago.

Boeing had a wonderfully experienced team of designers and builders who had successfully created the 707, 727, 737, 747, 757, 767, and 777 in-house, always on-time, and mostly within budget, and with few problems at introduction. That team is gone, either retired or employed elsewhere. (I took early retirement after the McD takeover of Boeing because I knew the new upper management team was clueless.) The 787 was designed in Russia, India, Japan, and Italy. The majority of the airplane is built outside the US in parts and shipped to Seattle and Charleston for assembly. “Gee, what could possibly go wrong?” Answer, just about everything. Because the McD people that now run Boeing don't believe in R&D, the structure of the airplane will be tested “in service”.

Commercial airplanes in their lifetime, typically make ten times as many flights and fly ten times as many flight hours as military airplanes, so the argument that composite structure has been "tested" because of the experience of composite military airplanes is just so much BS. So structure is a big issue. The airplane is very overweight. ”The all-electric controls have the same lack-of-experience issue that the structure has.” The only good news for me, is that the Boeing pension plan is currently fully funded, although it may not stay that way as the 787 catastrophe develops.”

The grounding of Boeing's fleet of 787 Dreamliners once again brings up an uncomfortable dilemma. How much testing is enough? However rigorous your testing regimen, some defects will get through. Managing the trade off between the cost of testing and too many escapes rests on the consequence of failure, not only the monetary cost and technical challenges, but the political and social issues raised, and the damage to a company's reputation. An aircraft malfunction threatens lives. *Evaluation Engineering* Executive Editor Rick Nelson looks at the fallout in this situation from the perspective of Boeing, its customers and test-equipment suppliers, and the society at large.

The problems surrounding the Boeing 787 Dreamliner are raising technical as well as political issues. Technical issues involve lithium-ion batteries, leaking fuel and oil, and cracked windshields, which are being addressed by engineers. The company has an additional card to play as the issues get sorted out.

Boeing suffered a blow to its multibillion-dollar aircraft program and corporate reputation in recent days, but it has one big advantage: Friends in high places, and an army of lobbyists, assuring regulators and lawmakers that the aerospace company is doing all it can to address the safety problems with its 787 Dreamliner.

Guy Norris at Aviation Week & Space Technology summed up the technical issues: "If the January 7 fire on a Japan Airlines 787 at Boston's Logan International Airport proved anything to Boeing, it was that no amount of exhaustive pre-service testing can guard against the unexpected." Norris went on to write, "The question now facing Boeing and the regulators, is whether the latest incident, which was centered on a lithium-ion battery unit, is more serious than a sneeze, and could be the possible trigger for a system modification or redesign." And John Hockenberry on The Takeaway radio program questioned whether the 787 would become Boeing's de Havilland DH 106 Comet. The broadcast journalist Miles O’Brien, who focuses on science, technology, and aerospace, said concerns about fuel leaks and cracked windshields amount to nitpicking, but the battery issues are more significant. He added that any problems with the 787's carbon-fiber construction would be unlikely to appear quickly.

Patrick Smith, who writes the Ask the Pilot blog, noted that although 787 issues are trending in a bad direction, “the 787 has not yet joined the likes of the Comet or the DC-10…." He added, "The good [news] is that the grounding came pre-emptively, before anybody was seriously hurt or killed. It’s also helpful that the problem, as we understand it thus far, is eminently fixable. Burning batteries are serious, but this isn’t a structural defect that’ll wind up costing billions."

According to Norris at Aviation Week, Boeing contends that the electrical problems on the 787 seem disproportionate because the craft has more electric functions than other models. However, a statement appearing on Boeing's site reads, "All modern jetliners have batteries. The 787's more-electric architecture has very little to do with batteries. The key innovation that enables the improved efficiency is the generation of more electrical power and the elimination of the high-pressure bleed air (pneumatic) system. The functions that were formerly powered pneumatically are now powered electrically."

In any case, Norris quoted Mike Sinnett, Boeing 787 vice president and chief project engineer, as saying lithium-ion technology "was the right choice for us at the time. Knowing what I know now, it would be the same choice." As for potential causes of the battery failure, Japan Today reported Saturday on an All Nippon Airways 787 that made an emergency landing Wednesday in western Japan, quoting Japan transport ministry investigator Hideyo Kosugi as saying, the state of the battery indicated that “voltage exceeding the design limit was applied” to it.

If there's good news, the investigator said that the battery damage on the Wednesday ANA flight was similar to the damage to a battery in a Japan Airlines 787 that caught fire January 7, while parked at Boston’s Logan International Airport; therefore engineers may only need to find a single root cause. Unfortunately, the Chicago Tribune reported today, that according to the NTSB, "Examination of the flight recorder data from the JAL B-787 airplane [whose battery caught fire in Boston, indicates that the APU (auxiliary power unit) battery did not exceed its designed voltage of 32 V."

Some have suggested that NiCd would have been the better technology choice, but of course saving weight is the whole point of Dreamliner design decisions. And if the cause of the problem is indeed an excessive charging voltage being applied, any battery technology would experience problems.

The reason lithium-ion batteries *do* catch fire involves tiny lithium particles that form fibers known as dendrites. Over several charge/discharge cycles, these dendrites can accumulate on the battery’s carbon anodes.

Once that happens, short circuits can occur,

Boeing 787 Battery Update

March 2013

Boeing is confident that the redesign of the lithium-ion batteries and added safety tests will fix the safety issue. Boeing has announced improvements to the lithium-ion batteries for its 787 Dreamliner. A series of modifications to the batteries and their casings were made in response to battery fires. The modifications along with improved testing regimes should prevent a repeat of the incidents.

The lithium-ion batteries have been a sensitive spot for Boeing because of the cloud that it cast over the new 787 Dreamliner. Exactly what caused the fires is still undetermined, but Boeing is confident that the redesign of the lithium-ion batteries and added safety tests will fix all the possible causes that Boeing and aircraft safety experts identified. If the modifications pass evaluation by the U.S. Federal Aviation Administration (FAA) and other international regulators, the 787 may return to service within a few weeks.

Lithium-ion batteries are part of Boeing's plans to move away from conventional onboard power systems that rely on a mixture of auxiliary power units and pneumatics to one where more electricity is used. The idea is to create a system that is lighter, cleaner and simpler by replacing pneumatic units and piping with electrical versions and wiring.

This approach requires using lithium-ion batteries due to their high amperage, low weight and fast recharge times. Unfortunately, the same heating problems that have plagued such batteries in laptops and electric cars can also effect aircraft – which is where the series of proposed changes come in.

Our first lines of improvements, the manufacturing tests and operations improvements, significantly reduce the likelihood of a battery failure," said Mike Sinnett, vice president and chief project engineer, 787 program, Boeing Commercial Airplanes. "The second line of improvements, changes to the battery, helps stop an event and minimize the effect of a failure within the battery if it does occur. And the third line of improvements, the addition of the new enclosure, isolates the battery so that even if all the cells vent, there is no fire in the enclosure and there is no significant impact to the airplane."

Battery manufacturing now includes four new or revised tests for screening batteries, bringing the total number of tests to ten over a fourteen-day period with discharge rates being measured on an hourly basis.

As to the batteries themselves, design changes include two new insulation layers including one of phenolic glass laminate. An electrical insulator is wrapped around each battery cell to electrically isolate them from one another and the battery case and there's more electrical and thermal insulation on top, below and between the cells to isolate them in the event of overheating. Wire sleeving and the wiring inside the battery have been upgraded to make them more heat and chafing resistant. New locking fasteners have been added to the bars connecting the cells

The case for the battery has also been redesigned to keep the batteries away from other electrical equipment. It has a stainless steel enclosure held in place by titanium fixtures and there are vents in the case to allow moisture to drain from the bottom and to vent gases overboard while preventing oxygen from getting to the batteries to support combustion. The enclosure can withstand the failure of eight battery cells and forces one and a half times greater than any projected failure. Under tests, it withstood three times the force.

"We put this new design through a rigorous set of tests. We tried to find a way to introduce a fire in the containment but it just wouldn't happen. Even when we introduced a flammable gas in the presence of an ignition source, the absence of oxygen meant there was no fire," says Sinnett.

These steps to improve battery safety have not come without a cost. The modifications have added 150 pounds (68 kg) more weight to the 787, which negates part of the reason for using lithium-ion batteries in the first place.

One for the AMEs...

A pilot narrowly escaped serious injury recently when he attempted horseback riding with no prior experience. After mounting his horse unassisted, the horse immediately began moving. As it galloped along at a steady and rhythmic pace, the pilot, who has not been named, began to slip sideways from the saddle.

Although attempting to grab for the horse's mane, the pilot could not get a firm grip. He then threw his arms around the horse's neck, but continued to slide down the side of the horse. The horse galloped along, seemingly oblivious to its slipping rider.

Finally, losing his grip, the rider attempted to leap away from the horse and throw himself to safety? However, his foot became entangled in the stirrup, leaving him at the mercy of the horse's pounding hooves as his head and upper body repeatedly struck the ground.

Moments away from unconsciousness and possible death, to his great fortune, an AME shopping at Walmart, saw him and quickly unplugged the horse!

The Jesus Nut

The castellated nut that secures the rotors on a helicopter.

One of Igor Sikorsky's mechanics was heard to say, "We better pray to Jesus that nut holds the whole thing together!" The nut did, in fact, hold the whole thing together and Sikorsky's first successful helicopter, the VS-300, flew that day. Ever since, helicopter people have known that nut as **"The Jesus Nut".**

CC-150 Polaris: Stephen Harper Gets His Way On Repainting Of VIP Airbus

After battling with the Department of National Defence over the right to repaint his airbus red and white, The Huffington Post has learned Prime Minister Stephen Harper is getting his way. The Prime Minister's grey aircraft, an Airbus A-310, which is designated as a CC-150 Polaris, has been slotted for a fresh paint job in August 2013 and sketches of the new design are currently being tossed around the Department Of National Defence, the Privy Council Office and the Prime Minister's Office. In fact, the first batch of drawings has already been nixed by political officials.

An early sketch by Jim Belliveau, obtained under Access to Information legislation, shows a colourful plane with native art on the tail. One side of the plane would have represented western Canada and the other side eastern Canada, but officials rejected the concept. Their response, however, hasn't discouraged Belliveau, the graphic designer at 410 Tactical Fighter Squadron at the Royal Canadian Air Forces' base, 4 Wing, Cold Lake in Alberta. Belliveau has been drawing plane designs for the Canadian Forces for 28 years.

He said he has been asked to come up with three final drawings for the aircraft. "A product which is easy to produce but at the same time looks professional and puts us in a good light," he said. "I want the best looking government airplane in the world," Belliveau added. "Regal? Yeah and polished. And it has to be better looking than the rest."

Records suggest Belliveau has been given a few pointers. The words "Government of Canada" must appear in large letters above the side windows in French and English. Under the cockpit window, phrases from Canada's national anthem will be written: "True North Strong and Free" in English, and in French, "Des plus brillant exploits."

A tender for the paint job will be released after the Prime Minister's Office picks a graphic scheme, which is expected sometime in the next year.

The cost of repainting the plane was deleted from the records obtained by HuffPost. Harper's office, however, has insisted it will be "cost-neutral" since the paint job will be delayed until the plane is up for routine maintenance. The mid-1980s Airbus, which was procured in 1993, is repainted approximately every six years.

Up until this year, records suggest Defence Minister Peter MacKay was insisting the aircraft keep its utilitarian, grey look. He maintained it should not be transformed into a fancy-looking VIP plane because the Canadian Forces routinely use the aircraft in support of military missions. Delivering supplies with a white plane was considered a no, no.

"As a result of the multi-role nature of this aircraft, which includes the transporting of Canadian Forces personnel and equipment into areas of operations, it has been painted in a colour scheme appropriate for those tasks," MacKay wrote in a 2010 letter.

This January, however, when the Prime Minister's Office asked MacKay to respond to queries about the Airbus' paint job, the Defence Minister struck a different tone.

"The Polaris was last painted in 2007, and as part of its normal maintenance cycle it will require repainting in 2012. Regardless of the paint scheme selected, the Canadian Forces will continue to employ all five CC-150 Polaris aircraft for strategic airlift," MacKay wrote. Records show the paint job was pushed to 2013 because the aircraft is scheduled for a massive strip down of all of its parts that year which will scuff its paint

The federal government has chosen the new paint scheme for the CC-150 Polaris aircraft that spends part of its time carrying the prime minister and other dignitaries around the country and overseas.

The four converted A310s owned by the RCAF are currently painted military grey and even the VIP aircraft spends most of its time in circumstances where those colours work best.

But when the PM pulls up on the ramp beside other heads of state at this meeting or that summit, the aircraft's austere appearance stands out. So the feds determined that at its next scheduled paint job would be a little more reflective of the country it sometimes represents.

The design above was among about 100 submitted by Jim Belliveau, the civilian graphic designer who does the paint schemes RCAF demo aircraft.

According to the Huffington Post, the new paint job will cost about $50,000 more than a standard spritz of olive drab because the colourful paint costs more.

The first production EC175 helicopter has undertaken its first flight at Eurocopter's Marignane, France headquarters facility. According to Eurocopter, the flight has 'confirmed the excellent performance of this next-generation multi-role helicopter'.

The company also announced the aircraft's performance figures, with a recommended cruise speed of 150 kts.,10 kts. faster than the previous figure without affecting payload range, while the maximum cruise speed exceeds 165 kts., all at extremely low vibration levels.

Eurocopter's programme flight tests to date also have confirmed the EC175's power performance including, hover out of ground effect (HOGE) at maximum take-off weight at 4,500 ft. at ISA+20°C conditions, advanced one engine inoperative (OEI) hover performance, which ensures safety during hoisting for search and rescue missions, extensive power reserve and heli-deck performance (PC1) at maximum take-off weight in ISA+20°C conditions, available with application of the latest certified version of Pratt & Whitney Canada's PT6C-67E engines.

Pratt & Whitney's PurePower® PW1000G Engine

PW 1000G Airborne Test B-747 Mounting Appendage

Pratt & Whitney PW1000G is a high-bypass geared turbofan engine currently selected as the exclusive engine for the Bombardier C-Series, Mitsubishi Regional Jet (MRJ), Embraer's second generation E-Jets, and as an option on the Irkut MS-21 and Airbus A320neo.

In a conventional turbofan, once the overall cycle has been defined, the tip speed required for the fan dictates the LP shaft rotational speed (i.e. rpm). Subsequently, at high bypass ratios (i.e. high radius ratios) the implied tip speeds of the LP turbine and (in this case) IP compressor are relatively low, which means extra turbine/compressor stages are required to keep the average stage loadings, and therefore, overall component efficiencies to an acceptable level. In a Geared Turbofan, fitting a reduction gearbox between the fan and the LP shaft allows the latter to run at a higher rotational speed thus enabling fewer stages to be used in both the LP turbine and the IP compressor. However, some energy will be lost as heat in the gear mechanism. Also the weight saved on turbine and compressor stages is offset to some extent by the mass of the gearbox. Furthermore there are manufacturing cost and reliability implications as well.

The geared turbofan current design, includes a variable-area nozzle, which offers significant economic benefits. Pratt & Whitney claims the PW1000G is 10% to 15% more fuel efficient than current engines used on regional jets and single-aisle jets, as well as being substantially quieter.

The engine was tested on the Pratt & Whitney Boeing 747SP, and the second phase of flight testing for the PW1000G was conducted on an Airbus A340-600. The testbed aircraft, with the engine in the number two pylon position, flew for the first time in Toulouse on October 14, 2008.

One of the airliners that helped usher in the mod-ern jet age has flown its last flight.

A pristine Boeing 720B, which Pratt and Whitney Canada used as an engine test bed for decades, flew from Saint-Hubert, QC, to Trenton ON in May, where it will be on display at the Air Force Museum there.

The aircraft was donated to the Canada Air and Space Museum and is on loan to the Air Force museum. The 720 was a smaller and shorter range version of the 707 and less than 200 were built.

This aircraft was instantly recognizable by its elongated nose, which was the mount for test articles of a wide range of turboprop engines produced by P&WC.

The company replaced the old turbo-jet with a couple of Boeing 747SPs and they'll be used to test the PurePower advanced jet engines being developed by the company.

Once the wings go on, they never come off whether they can be seen or not. They fuse to the soul through adversity, fear and adrenaline and no one who has ever worn them with pride, integrity and guts, can ever sleep through the "call of the wild" that wafts through the bedroom windows in the deep of the night.

When a good airman leaves the "job" and retires, many are jealous, some are pleased and yet others, who may have already retired, wonder. We wonder if he knows what he is leaving behind, because we already know. We know, for example, that after a lifetime of camaraderie that few experience, it will remain as a longing for those past times. We know in the world of flying, there is a fellowship which lasts long after the flight suits and uniforms are hung up in the back of the closet. We know even if he throws them away, they will be on him with every step and breath that remains in his life. We also know how the very bearing of a man speaks of what he was and in his heart still is.

Because we flew, we envy no man on earth.

Fallen Eagles

Eternal rest grant them O Lord, and let perpetual light shine upon them.

- **Scoffin, Jack** **January 26, 2013**
- **Myers, George L. (Fox)** **February 26, 2013**
- **Storhaug, Jo (Wardair FE)** **March 24, 2013**

We record with great sadness the passing of the following member of the Association

.***George Lane Meyers*** Sgt., RCAF, passed away at the Kipnes centre for veterans at age 77.
George lived a bold life beloved by those that knew his heart.
He will be deply missed.
Donation may be made in his name to the Alberta Heart and Stroke Foundation.

MUST SEE WEBSITES

Superstructures Antonov 225
www.youtube.com/watch?v=FsVVAldGLHA

This film relates the story of the Lockheed C-5 Galaxy
A cargo plane—the worlds largest plane at the time of its introduction. You'll learn about the many problems encountered during its construction, why the plane was manufactured, the unique features of the aircraft and its capabilities. You'll also see roll-out ceremonies and the maiden flight of the aircraft from Dobbins AFB.
http://www.youtube.com/watch?v=Z6Vb4JlYSWs

All you aviation types
Get comfortable, then open up and explore.
http://imageevent.com/okbueno/mopic

The Shuttleworth Collection in Bedfordshire UK.
It's a 60 minute and features many of the Collection's aircraft.
http://www.youtube.com/watch?v=bV7nFXhL8QY

This site will tell you who is flying and where they are going. It shows all the aircraft in the air right now.
In the left hand column, there is a box called "planes." The number in the box is the number of aircraft airborne. Note; Drag the map to take you to the area you want to view. To view your region or town, you can zoom in by tapping with your mouse. On the map you will see all the planes in the air. Click on a airplane, and on the left screen you will get all the info. airline, type, speed, altitude in real time, re calculated every 10 seconds. On some you can also click on 'view from the cockpit'.
http://www.flightradar24.com/

The crew (and passengers) of Air Canada storm to victory with their rendition of "Call me Maybe" at ISPY 2013 in Brighton.
www.youtube.com/watch?v=go33Roh28BE

A man walks into a psychiatrist's office and tells her he thinks he is turning into a dog.
"says the doctor, get on the couch,"
"No way he replies, I'm not allowed on the furniture"

CMFEA FINANCIAL REPORT 2012

CREDITS

Bank Balance Brought Forward 31 Dec 11	$ 8699.48
Dues Annual / life membership	$ 670.00
Interest from Credit Union	$ 120.45
Shares Credit Union Credited	$ 20.00
F/E hosted Aircrew Christmas Party	$ 15.00
CREDIT SUBTOTAL	$ 9524 .93

DEBITS

Credit Union Cheque Book Purchase	$ 20.25
Propwash Editor Stipend	$ 200.00
Web Site Update	$ 39.55
CMFEA Annual Draw (Ken Mugford)	$ 100.00
President's Travel Expenses to Reunion	$ 300.00
PROPWASH Postage &Envelopes X 3	$ 510.25
PROPWASH Photo Copying & Stapling	$ 369.78
DEBIT	$ 1539.78

SUMMARY

CREDITS SUBTOTALS	$ 9524.93
DEBITS SUBTOTALS	$ 1539.78
CREDIT UNION Held Shares	$ 44.80
GIC SCOTIABANK as of last statement	$ 6487.29
GRAND TOTAL OF CMFEA ASSETS	$ 14517.24

Donald Steers (Examiner) - Ray McIntosh (Treasurer)
Note: signed copies of records held by treasurer

The PROPWASH has cost $880.03 to publish & deliver for 2012. The website contract (5 years for $608.33) cost $121.60 in addition to $39.55 for updating each year.

The Editor, Bruce Dyer, does an excellent job producing PROPWASH. It requires many hours of research and work to make up this very informative newsletter three times a year. This vital link of communication keeps CMFEA strong. In this regard, the CMFEA committee voted unanimously to increase the editor's small gratuity to $300.00 per year.

There might be those who do not appreciate the work that's involved in producing this excellent newsletter. Some who don't realize the efforts that are put in by committees to organize reunions, and the work done by the executive, to administer our 25 year old, association.

I suspect that there are many penny-pinchers out there who take advantage of the CMFEA website to read the newsletters and announcements, to save paying the $10.00 yearly fee or a $100.00 for a lifetime membership!

PROPWASH WEBSITE <http://www.cmfea.ca>

Association President and Website Editor
Mac MacGregor — (613) 475-5711 — lg.macgregor@sympatico.ca
8 Rosslyn Drive, Brighton ON K0K 1H0
Treasurer
Ray McIntosh —— (613) 392-2688 —— raymc@bell.net
61 Nicholas St., Trenton ON K8V 4H7
Secretary
D.M. Knockleby —— (613) 394-5958 —— knock_knockleby@hotmail.com
46 First Avenue, Trenton ON K8V 4G4
Editor
Bruce Dyer —— (905) 639-6709 —— tdyer@cogeco.ca
701 Castleguard Cr., Burlington ON L7N 2W7
Members – please submit changes of home or email addresses to:
Ray Trepanier ---- (519) 680-7625 ---- rtrepanier@uniserve.com
222-2025 Meadowgate Blvd. London ON N6M 1K9